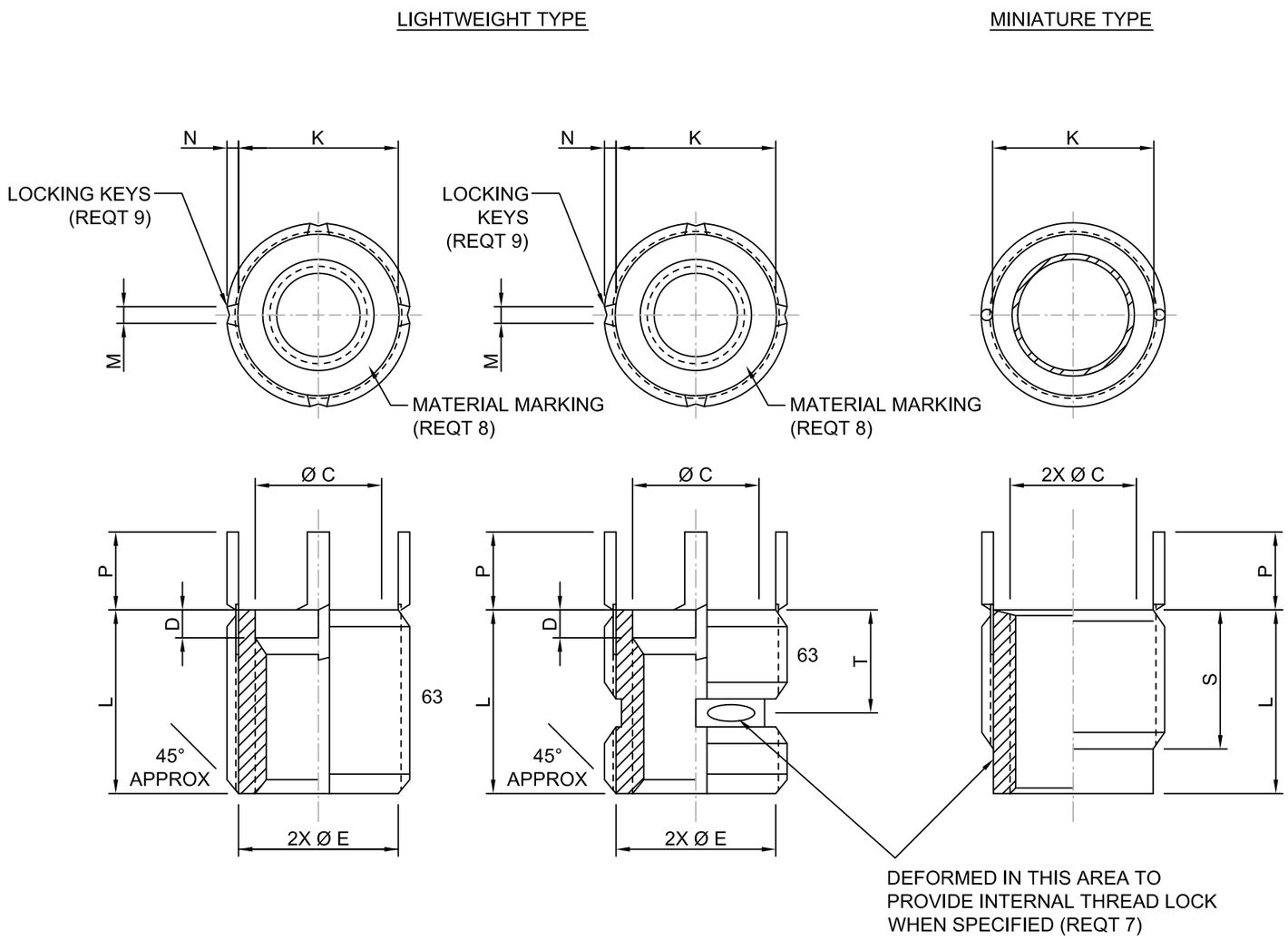

Rev	Date	Description
A	22/04/08	NEW DRAWING

Project:

Title:

The Information contained in this document is subject to copyright and may not be reproduced or transmitted in any form without the written concent of Kinetic Design

KINETIC DESIGN

CAD Services
and
design

www.kineticav.com

East London
Eastern Cape
SouthAfrica

+27 726 3814

Date: 22/04/08

Scale: NTS

Drawn: AL

Rev: A

Dwg No: