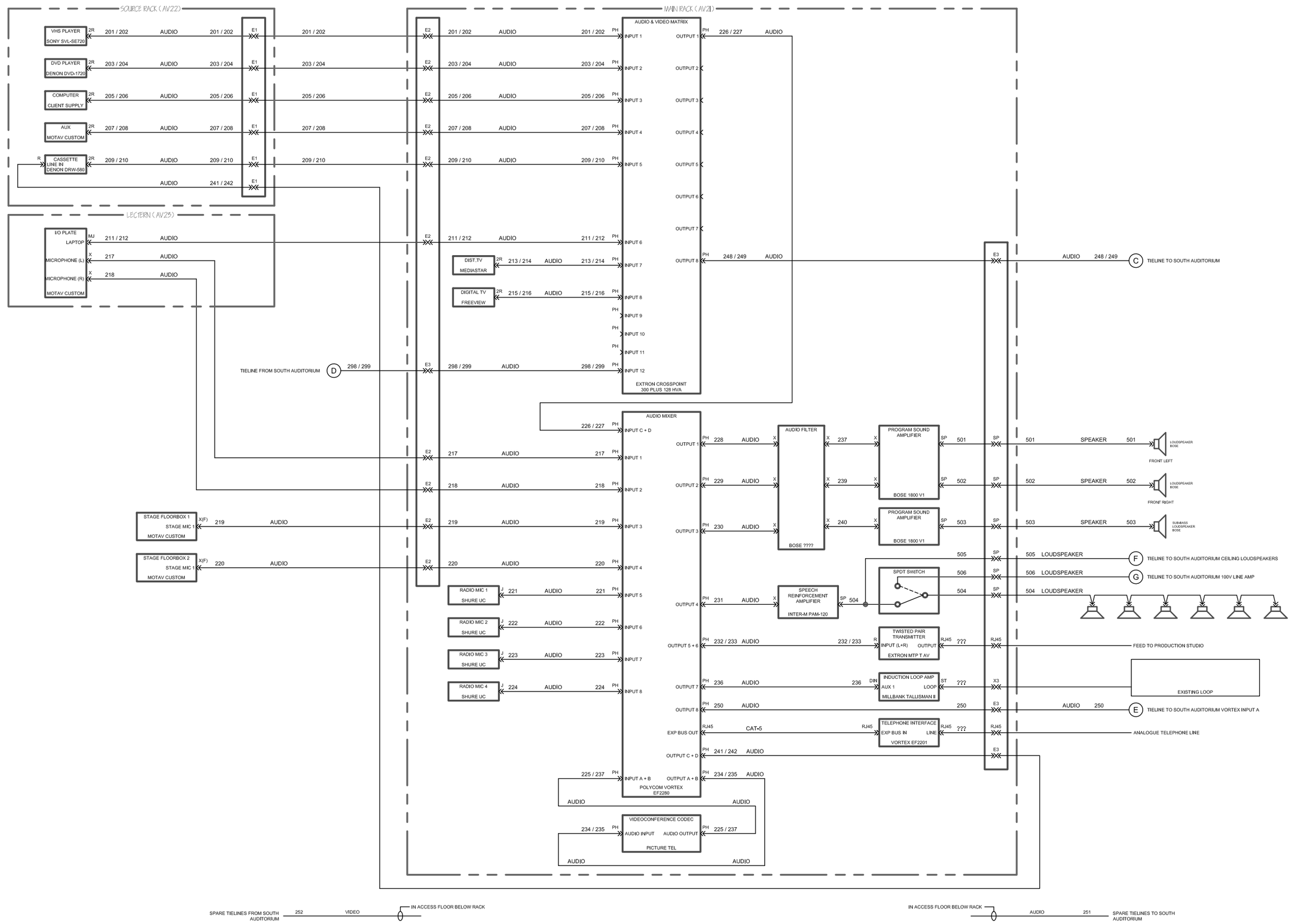

Rev	Date	Description

Project:

Title:

The information contained in this document is subject to copyright and may not be reproduced or transmitted in any form without the written concent of Motav Limited

KINETIC Design

CAD Services

www.kineticav.com

Date: 18/07/06

Scale: NTS

Drawn: WL

Rev: D

Dwg No: 1414-AV22